Chapter 2. Modeling in the Frequency Domain

$$\frac{d^n c(t)}{dt^n} + a_{n-1}\frac{d^{n-1}c(t)}{dt^{n-1}} + \cdots + a_0 c(t) = b_m \frac{d^m r(t)}{dt^m} + b_{m-1}\frac{d^{m-1}r(t)}{dt^{m-1}} + \cdots + b_0 r(t) \qquad (1.2)^4$$

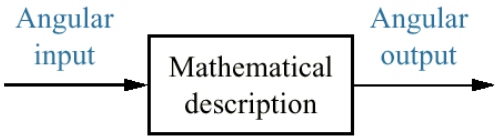

Things to know

- **Laplace transform**
- **Inverse Laplace transform**
  - **Partial fraction expansion** (부분분수 전개법)
- **Transfer function** (전달함수)
- **How to solve an ODE using the Laplace transform**
- **Poles and zeros** (극점과 영점)
- **Linearity** (선형성)
- **Linearization** (선형화)

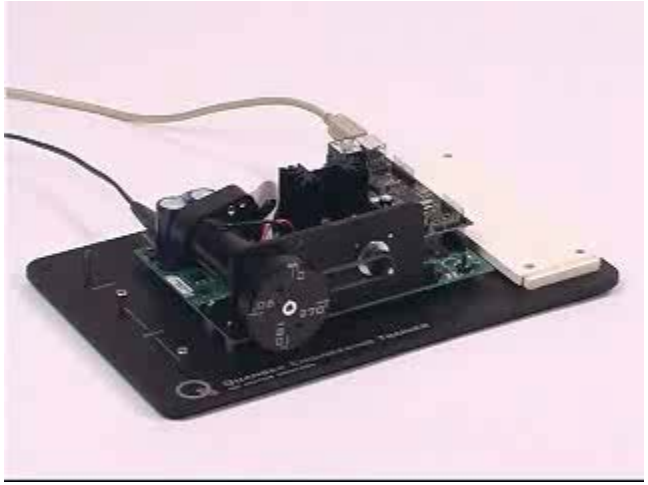

Block diagram representation of a system

$$\frac{d^n c(t)}{dt^n} + a_{n-1}\frac{d^{n-1}c(t)}{dt^{n-1}} + \cdots + a_0 c(t) = b_m \frac{d^m r(t)}{dt^m} + b_{m-1}\frac{d^{m-1}r(t)}{dt^{m-1}} + \cdots + b_0 r(t) \qquad (1.2)^4$$

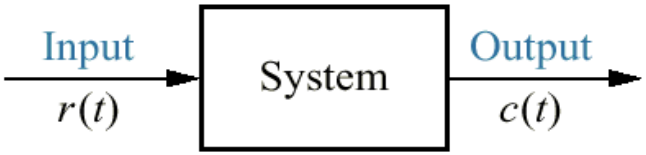

(a)

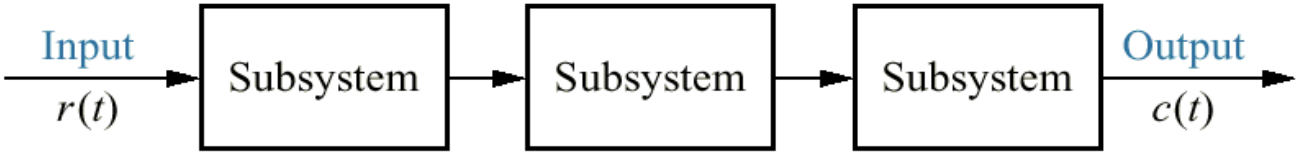

(b)

Note: The input, $r(t)$, stands for *reference input*.
The output, $c(t)$, stands for *controlled variable*.

(a) Concept, (b) Layout, (c) Schematic, (d) Block Diagram

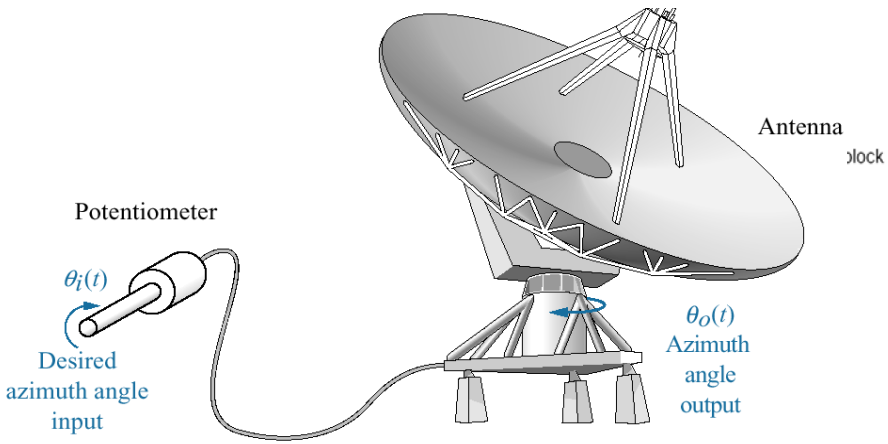

(a)

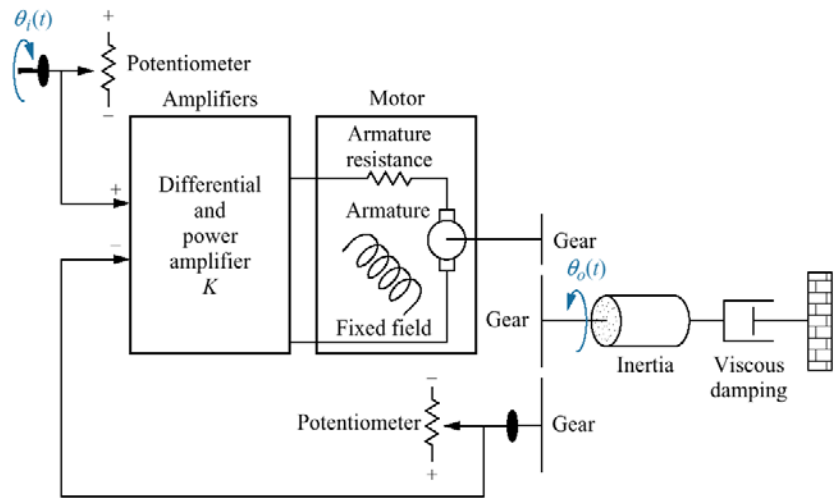

(c)

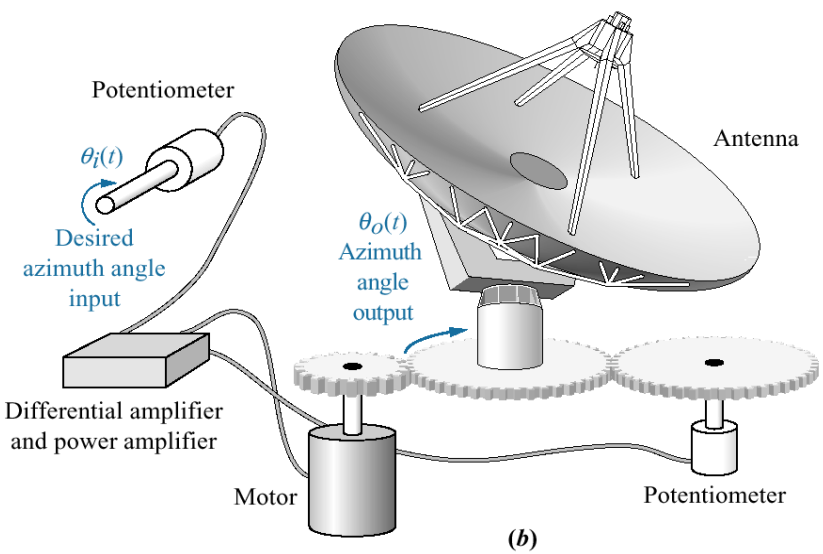

(b)

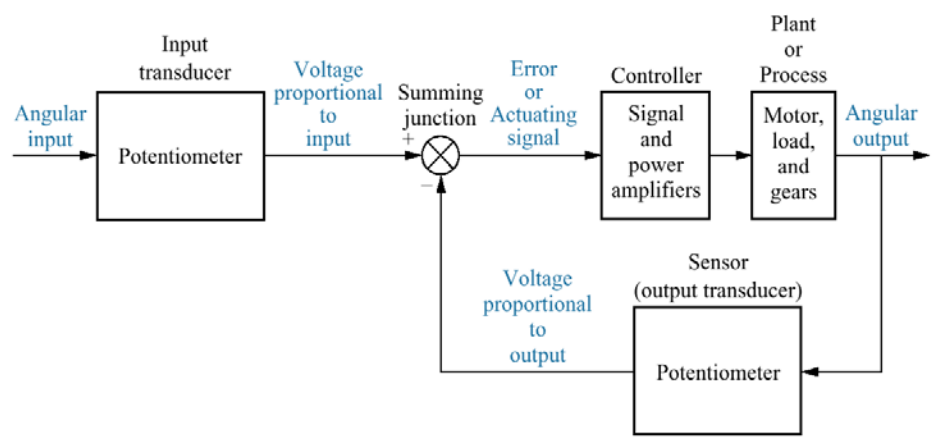

(d)

Potentiometer

http://www.wiley.com/college/nise/0471794759/swf/Potentsiometer.swf

Antenna (Ch. 2)

http://www.wiley.com/college/nise/0471794759/swf/AntenaChap1.swf

http://www.wiley.com/college/nise/0471794759/swf/Potentsiometer.swf

제어시스템의 설계 절차

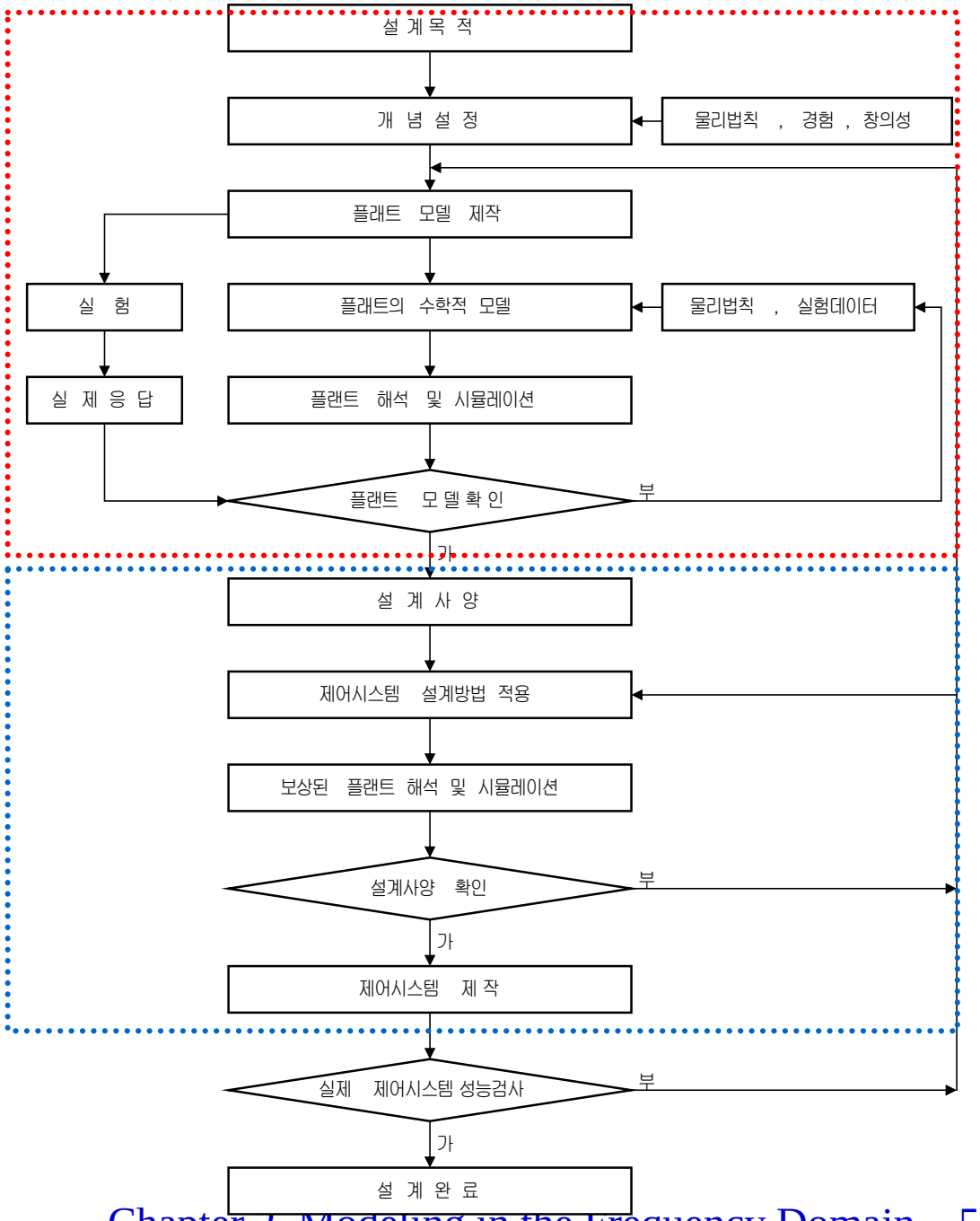
설 계 목 적
개 념 설 정
물리법칙 , 경험 , 창의성
플래트 모델 제작
실 험
플래트의 수학적 모델
물리법칙 , 실험데이터
실 제 응 답
플랜트 해석 및 시뮬레이션
플랜트 모 델 확 인
부
가
설 계 사 양
제어시스템 설계방법 적용
보상된 플랜트 해석 및 시뮬레이션
설계사양 확인
부
가
제어시스템 제 작
실제 제어시스템 성능검사
부
가
설 계 완 료

Review: Complex variable

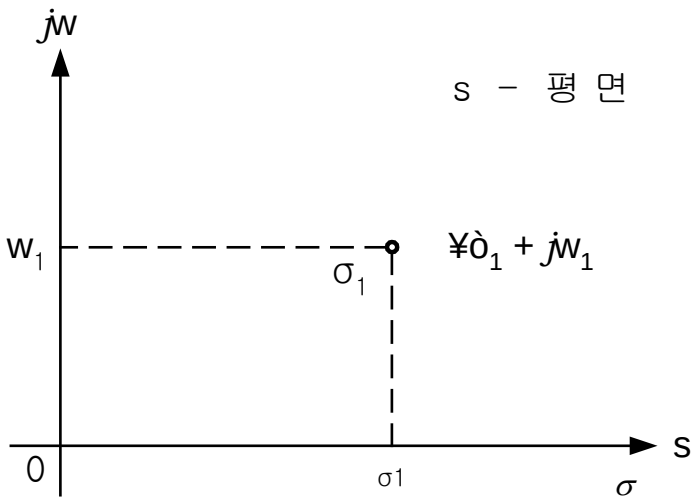

$$s = \sigma + j\omega, \quad j = \sqrt{-1},\ j^2 = -1$$

Euler's Equation

$$A = \cos\theta + j\sin\theta$$

$$\frac{dA}{d\theta} = -\sin\theta + j\cos\theta = j^2\sin\theta + j\cos\theta = jA$$

Hence, $\dfrac{\mathrm{dA}}{\mathrm{A}} = jd\theta$

Integrating both sides, $\ln A = j\theta + c$

If we let $\theta = 0$, then $c = 0$, that is, taking exponential

$$A = e^{j\theta}$$

$$= \cos\theta + j\sin\theta$$

Review: Complex function

Complex function

$$G(s) = \mathrm{Re}\,G(s) + j\,\mathrm{Im}\,G(s)$$

$$G(s) = X + jY$$

$$|G(s)| = \sqrt{X^2 + Y^2}, \quad \angle G(s) = \tan^{-1}(Y/X)$$

$$G^*(s) = X - jY$$

Definition: Analytic Function

G(s) is said to be analytic at s_0 if its derivative exists at s_0 and at each point in the neighborhood of s_0.

Cauchy Theorm: If G(s) is analytic inside and on a closed simple contour C, then

$$\oint_C G(s)ds = 0$$

Definition: Singularity

If G(s) is NOT analytic at s_0, but is analytic at some point in every neighborhood of s_0, then s_0 is said to be a singularity of G.

Single-valued function(단가함수)

복소변수 s의 하나의 값(s-평면에서 한 점)이 단 하나의 G(s)값과 대응

Single-valued mapping(단가사상)

s-평면의 각 점들에 대응하는 G(s) 평면의 대응점들의 사상(mapping)

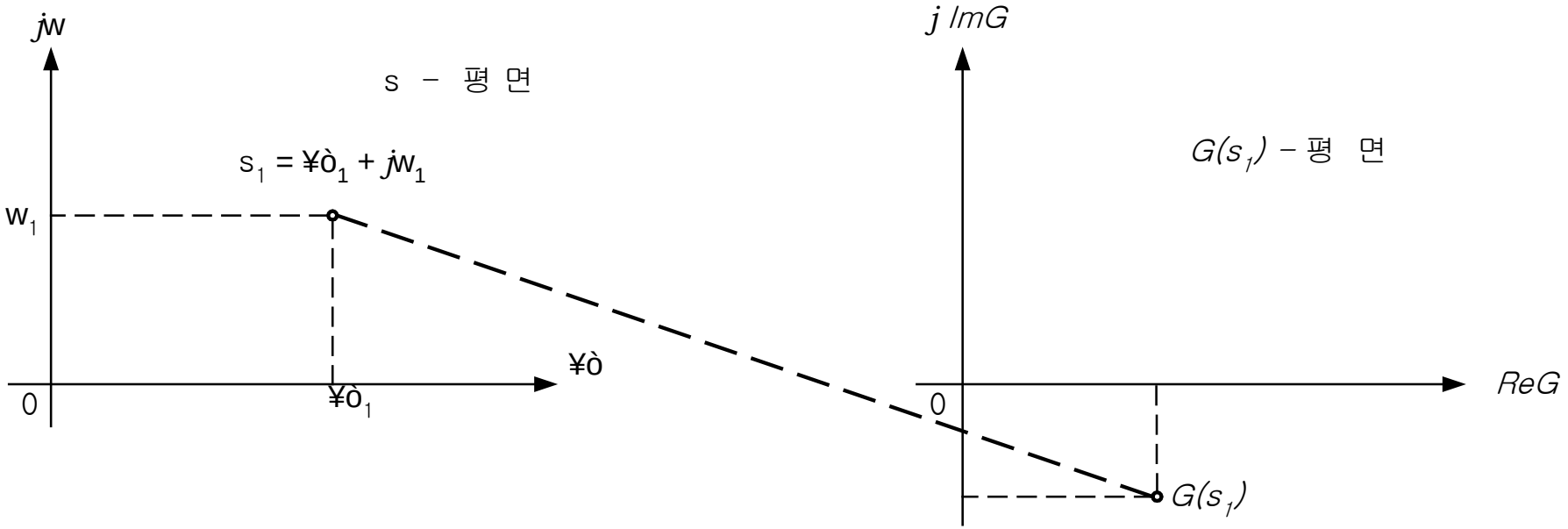

s–평면으로부터 G(s)–평면으로의 단가사상

- 복소함수 **G(s)**-평면으로부터 복소변수 **s**-평면으로의 사상이 단가관계가 되지 않는 함수

$$G(s) = \frac{1}{s(s+1)}$$

s = 0 과 s = -1 에서 $G(s) = \infty$

- 해석함수(analytic function)
  - 임의의 복소함수 **G(s)** 와 그 복소함수의 모든 도함수의 값들이 **s**-평면의 영역 안에서 모두 존재하면 복소함수 **G(s)**는 그 영역 안에서 해석 함수

- 복소함수의 특이점(singularity)

  s-평면에서 그 복소함수 자체나 그 복소함수의 도함수 값이 정의되지 않는 점을 말한다.

  * 극점은 가장 일반적인 형태의 특이점

- 극점(pole)

복소함수 G(s)가 s_i를 제외한 s_i의 부근에서 해석적이고 단가이며, 또한 극한값 $\lim_{s \to s_i}[(s-s_i)^r G(s)]$가 0이 아닌 유한한 값을 가지면, 복소함수 G(s)는 $s = s_i$ 에서 r차의 극점을 갖는다. r = 1 이면, $s = s_i$ 에서 단일극점(single pole)

$$G(s) = \frac{1}{s(s+1)}, \qquad \text{poles: } s = 0, \ \ s = 1$$

- 영점(zero)

G(s)가 $s = s_i$ 에서 해석적이고 $\lim_{S \to S_i}\left[(s-s_i)^{-r} G(s)\right]$가 0이 아닌 유한한 값을 가지면, G(s)는 $s = s_i$ 에서 r차의 영점을 갖는다.

예) $G(s) = \dfrac{10(s+3)}{s(s+1)(s+2)^2}$ $\qquad pole = ? \quad zero = ?$

➢ Laplace Transform

Definition: $If \int_0^\infty \left| f(t)e^{-\sigma t} \right| dt < \infty$

$$\mathcal{L}\{f(t)\} = F(s) = \int_{0-}^{\infty} f(t)e^{-st}dt \qquad (2.1)$$

where

$$s = \sigma + j\omega$$

➢ Inverse Laplace Transform

$$\mathcal{L}^{-1}\{F(s)\} = \frac{1}{2\pi j}\int_{\sigma - j\infty}^{\sigma + j\infty} F(s)e^{st}ds$$

$$= f(t)u(t) \qquad (2.2)$$

where

$$u(t) = 1 \qquad t>0$$

$$= 0 \qquad t<0$$

- Laplace 변환법의 장점

1) 선형 상미분방정식의 일반해와 특수해를 한 번의 연산으로 동시에 구할 수 있다.
2) 상미분방정식 문제를 복소변수 s에 관한 대수방정식 문제로 변환하여 연산을 쉽게 수행할 수 있다.

- Laplace 변환의 정의
  - 어떤 유한 실수 σ 에 대하여 다음조건을 만족하면

$$\int_0^\infty \left| f(t)e^{-\sigma t} \right| dt < \infty$$

함수 *f(t)*의 *Laplace* 변환은

$$\mathcal{L}[f(t)] = F(s) = \int_{0-}^{\infty} f(t)e^{-st}\,dt \qquad (2.1)$$

Laplace transform table

Item no.	*f(t)*	*F(s)*
1.	$\delta(t)$	1
2.	$u(t)$	$\frac{1}{s}$
3.	$tu(t)$	$\frac{1}{s^2}$
4.	$t^n u(t)$	$\frac{n!}{s^{n+1}}$
5.	$e^{-at}u(t)$	$\frac{1}{s+a}$
6.	$\sin \omega t u(t)$	$\frac{\omega}{s^2+\omega^2}$
7.	$\cos \omega t u(t)$	$\frac{s}{s^2+\omega^2}$

Example: Laplace transform of Ae^{-at}

$$F(s) = \int_0^\infty f(t)e^{-st}\,dt = \int_0^\infty Ae^{-at}e^{-st}\,dt = A\int_0^\infty e^{-(s+a)t}\,dt$$

$$= -\frac{A}{s+a}e^{-(s+a)t}\Big|_{t=0}^{\infty} = \frac{A}{s+a} \qquad (2.3)$$

Definition: A function f(x) is said to be linear if for every x_1 and x_2

$$f(\alpha_1 x_1 + \alpha_2 x_2) = \alpha_1 f(x_1) + \alpha_2 f(x_2),\ \forall \alpha_1, \alpha_2 \in R.$$

Question: The Laplace transform is a linear operator?

Note: function=operator=transformation=map=mapping

[예제 2.2] 단위스텝함수 $u_s(t)$ 에 대한 Laplace 변환함수

$$f(t) = u_s(t) \begin{cases} = 0 & t < 0 \\ = 1 & t > 0 \end{cases}$$

$$(Sol) \qquad F(s) = \mathrm{L}\left\{u_s(t)\right\} = \int_0^\infty u_s(t) e^{-st} dt$$

$$= \frac{-1}{s} e^{-st} \Big|_0^\infty = \frac{1}{s}$$

[예제 2.3] 다음 정현파 함수에 대한 Laplace 변환함수

$$f(t) = A\sin(\omega t + \Phi)$$

(Sol) Euler 공식을 이용 $e^{j\theta} = \cos\theta + j\sin\theta$

혹은,

$$\cos\theta = \frac{e^{j\theta} + e^{-j\theta}}{2}, \qquad \sin\theta = \frac{e^{j\theta} - e^{-j\theta}}{2j}$$

따라서,

$$f(t) = \frac{A}{2j}\left\{e^{j(\omega t+\Phi)} - e^{-j(\omega t+\Phi)}\right\}$$

$$= c_1 e^{\lambda_1 t} + c_2 e^{\lambda_2 t}$$

여기서,

$$c_1 = \frac{A}{2j}e^{j\Phi}, \qquad c_2 = \frac{-A}{2j}e^{-j\Phi},$$

$$\lambda_1 = j\omega \quad , \qquad \lambda_2 = -j\omega$$

$$\therefore \quad F(s) = \frac{c_1}{s-\lambda_1} + \frac{c_2}{s-\lambda_2} = \frac{A}{2j}\left(\frac{e^{j\Phi}}{s-j\omega} - \frac{e^{-j\Phi}}{s+j\omega}\right)$$

$$= A\frac{s\sin\Phi + \omega\cos\Phi}{s^2+\omega^2}$$

$$c_1 = \frac{A}{2j}e^{j\Phi}, \qquad c_2 = \frac{-A}{2j}e^{-j\Phi},$$

만약 ϕ = 0 이면,

$$\mathrm{L}\left\{A\sin\omega t\right\} = \frac{A\omega}{s^2+\omega^2}$$

또한 $\Phi = \frac{\pi}{2}$ 인 경우에는,

$$\mathrm{L}\left\{A\sin(\omega t + \frac{\pi}{2})\right\} = \mathrm{L}\left\{A\cos\omega t\right\} = \frac{As}{s^2+\omega^2}$$

- Laplace 변환에 관한 정리

(1) 상수의 곱(multiplication by a constant)

$$\mathcal{L}\{kf(t)\} = kF(s) \qquad (2.7)$$

(2) 가감산(sum and difference)

$$\mathcal{L}\{f_1(t) \pm f_2(t)\} = F_1(s) \pm F_2(s) \qquad (2.8)$$

(3) 미분(differentiation)

$$\mathcal{L}\left\{\frac{d}{dt}f(t)\right\} = sF(s) - f(0) \qquad (2.11)$$

Proof) $$F(s) = \int_0^\infty f(t)e^{-st}\,dt = f(t)\frac{e^{-st}}{-s}\Bigg|_0^\infty - \int_0^\infty \left\{\frac{d}{dt}f(t)\right\}\frac{e^{-st}}{-s}\,dt$$

$$= \frac{f(0)}{s} + \frac{1}{s}\mathcal{L}\left\{\frac{d}{dt}f(t)\right\} \qquad \left(\because \int uv' = uv - \int u'v\right)$$

$$\mathcal{L}\left\{\frac{d^n f(t)}{dt^n}\right\} = s^n F(s) - s^{n-1}f(0) - s^{n-2}f^{(1)}(0) - \cdots - f^{(n-1)}(0) \quad (2.12)$$

(4) 적분(integration)

$$\mathcal{L}\left\{\int_0^t f(t)dt\right\} = \frac{F(s)}{s} + \frac{1}{s}\left[\int f(t)dt\right]_{t=0^+}$$

$$= \int_0^\infty \left(\int_0^t f(t)dt\right)e^{-st}dt \qquad \left(\int uv' = uv - \int u'v\right)$$

$$= -\left.\frac{\int_0^t f(t)dt \cdot e^{-st}}{s}\right|_0^\infty - \left(-\int_0^\infty \frac{f(t)e^{-st}}{s}dt\right) = \frac{F(s)}{s} + \frac{1}{s}\left[\int f(t)dt\right]_{t=0^+} \qquad (2.13)$$

일반적으로 n차 적분에 대해서는,

$$\mathcal{L}\left\{\int\int\cdots\int f(t)dt^n\right\} = \frac{F(s)}{s^n} + \frac{1}{s^n}\left[\int f(t)dt\right]_{t=0^+} +$$

$$+\frac{1}{s^{n-1}}\left[\int\int f(t)dt^2\right]_{t=0^+} + \cdots \frac{1}{s}\left[\int\int\cdots\int f(t)dt^n\right]_{t=0^+} \qquad (2.14)$$

(5) 복소수 추이(complex shifting)

$$\mathcal{L}\left\{e^{\mp at} f(t)\right\} = F(s \pm a) \qquad (2.15)$$

(6) 시간 지연(time delay)

시간 **T**만큼 지연된 함수 **f(t-T)**의 **Laplace** 변환함수

$$\mathcal{L}\left\{ f(t-T)\right\} = e^{-Ts} F(s) \qquad (2.16)$$

Proof)

$$F(s) = \int_0^\infty f(\lambda) e^{-s\lambda} d\lambda = \int_0^\infty f(t-T) e^{-s(t-T)} dt$$

$$= e^{Ts} \int_0^\infty f(t-T) e^{-st} dt \qquad (2.17)$$

또는

$$\mathcal{L}\left\{ f(t-T)\right\} = \int_0^\infty f(t-T) e^{-st} dt = \int_{-T}^\infty f(\lambda) e^{-s(\lambda+T)} d\lambda$$

$$= e^{-sT} \int_0^\infty f(\lambda) e^{-s\lambda} d\lambda = e^{-sT} F(s)$$

(7) 초기값 정리(initial value theorem)

f(t)의 Laplace 변환함수를 F(s)라 할 때 f(t)의 초기값

$$\lim_{t\to 0} f(t) = \lim_{s\to\infty} sF(s) \qquad (2.18)$$

Proof) 먼저

$$\mathrm{L}\left\{\frac{d}{dt} f(t)\right\} = sF(s) - f(0) \qquad (2.19)$$

또한 $\lim_{s\to\infty} e^{-st} = 0$ 이므로

$$\lim_{s\to\infty}\int_0^\infty \left\{\frac{d}{dt} f(t)\right\} e^{-st} dt = 0 = \lim_{s\to\infty}\left(sF(s) - f(0)\right) \qquad (2.20)$$

$$\therefore \quad \lim_{t\to 0} f(t) = \lim_{s\to\infty} sF(s)$$

(8) 최종값 정리(final value theorem)

f(t)의 Laplace 변환함수가 F(s)이고 sF(s)가 허수축상과 우반 s-평면 내에서 해석적이면 f(t)의 최종값은 다음과 같다.

$$\lim_{t\to\infty} f(t) = \lim_{s\to 0} sF(s) \qquad (2.21)$$

Proof)

$$\lim_{s\to 0}\int_0^\infty \left\{\frac{d}{dt} f(t)\right\} e^{-st} dt = \lim_{s\to 0}\left\{sF(s) - f(0)\right\} \qquad (2.22)$$

여기서, $\lim_{s\to 0} e^{-st} = 1$ 이므로,

$$\int_0^\infty \left\{\frac{d}{dt} f(t)\right\} dt = f(t)\Big|_0^\infty = f(\infty) - f(0)$$

$$= \lim_{s\to 0} sF(s) - f(0) \qquad (2.23)$$

따라서

$$f(\infty) = \lim_{t\to\infty} f(t) = \lim_{s\to 0} sF(s) \qquad (2.24)$$

단, sF(s)의 실수부가 0 또는 양(+)인 어떤 극점을 포함한다면 최종값 정리를 이용할 수 없다.

(9) 합성적분(convolution)

함수 $f_1(t)$ 와 $f_2(t)$의 Laplace 변환함수가 각각 $F_1(s)$와 $F_2(s)$이고 t ≤ 0에서 $f_1(t)=0$, $f_2(t)=0$ 이라 하면,

$$F_1(s)F_2(s) = \mathcal{L}\left\{\int_0^t f_1(\tau)\, f_2(t-\tau)d\tau\right\}$$

$$= \mathcal{L}\left\{\int_0^t f_1(t-\tau)\, f_2(\tau)d\tau\right\} \qquad (2.25)$$

$$= \mathcal{L}\left\{ f_1(t) * f_2(t)\right\}$$

Proof) 먼저, 두 개의 함수 $f_1(t)$ 와 $f_2(t)$ 에 대한 합성적분

$$f(t) = f_1(t) * f_2(t) = \int_0^t f_1(t-\tau)\, f_2(\tau)d\tau \qquad (2.27)$$

에서 t < 0 일 때 $f_1(t)$ 와 $f_2(t)$ 가 모두 0이라고 가정한다.

그러므로 τ > t 일 때 $f_1(t-\tau)=0$ 이다.

따라서

$$f(t) = \int_0^\infty f_1(t-\tau)\, f_2(\tau)d\tau \qquad (2.28)$$

그리고, 위 식과 같이 표현된 f(t)를 Laplace 변환하면,

$$F(s) = \int_0^\infty \left\{ \int_0^\infty f_1(t-\tau) f_2(\tau) d\tau \right\} e^{-st} dt \qquad (2.29)$$

또한, 위 식에서 적분의 순서를 바꾸면, F(s)는

$$F(s) = \int_0^\infty \int_0^\infty e^{-st} f_1(t-\tau) f_2(\tau) dt\, d\tau$$

$$= \int_0^\infty f_2(\tau) \left\{ \int_0^\infty e^{-st} f_1(t-\tau) dt \right\} d\tau \qquad (2.30)$$

우선 t에 관한 적분을 수행하기로 하고, 편의상 $(t-\tau)$를 λ로 치환한다.
이 때,

$$\int_0^\infty e^{-st} f_1(t-\tau) dt = \int_{\lambda=-\tau}^\infty e^{-s(\lambda+\tau)} f_1(\lambda) d\lambda$$

$$= e^{-s\tau} \int_0^\infty e^{-s\lambda} f_1(\lambda) d\lambda$$

$$= F_1(s) e^{-s\tau} \qquad (2.31)$$

그러므로,

$$F(s) = \int_0^\infty f_2(\tau) F_1(s) e^{-s\tau} d\tau \qquad (2.32)$$

여기서, $F_1(s)$ 는 τ의 함수가 아니므로

$$F(s) = F_1(s) \int_0^\infty f_2(\tau) e^{-s\tau} d\tau = F_1(s) F_2(s) \quad (2.33)$$

$$\therefore \ \mathrm{L}\left\{ \int_0^t f_1(\tau) f_2(t-\tau) d\tau \right\} = \mathrm{L}\left\{ \int_0^t f_1(t-\tau) f_2(\tau) d\tau \right\}$$

$$= F_1(s) F_2(s)$$

* 유의사항

$$\mathrm{L}^{-1}\left\{ F_1(s) F_2(s) \right\} \neq f_1(t) f_2(t) \qquad (2.34)$$

또한, 두 함수의 곱 $f_1(t) f_2(t)$ 의 **Laplace** 변환함수는 다음과 같이 표시된다.

$$\mathrm{L}\left\{ f_1(t) f_2(t) \right\} = F_1(s) * F_2(s) \qquad (2.35)$$

Laplace transform theorems

Item no.	Theorem		Name
1.	$\mathscr{L}[f(t)] = F(s)$	$= \int_{0-}^{\infty} f(t)e^{-st}dt$	Definition
2.	$\mathscr{L}[kf(t)]$	$= kF(s)$	Linearity theorem
3.	$\mathscr{L}[f_1(t) + f_2(t)]$	$= F_1(s) + F_2(s)$	Linearity theorem
4.	$\mathscr{L}[e^{-at}f(t)]$	$= F(s+a)$	Frequency shift theorem
5.	$\mathscr{L}[f(t-T)]$	$= e^{-sT}F(s)$	Time shift theorem
6.	$\mathscr{L}[f(at)]$	$= \frac{1}{a}F\left(\frac{s}{a}\right)$	Scaling theorem
7.	$\mathscr{L}\left[\frac{df}{dt}\right]$	$= sF(s) - f(0-)$	Differentiation theorem
8.	$\mathscr{L}\left[\frac{d^2f}{dt^2}\right]$	$= s^2F(s) - sf(0-) - \dot{f}(0-)$	Differentiation theorem
9.	$\mathscr{L}\left[\frac{d^nf}{dt^n}\right]$	$= s^nF(s) - \sum_{k=1}^{n} s^{n-k}f^{k-1}(0-)$	Differentiation theorem
10.	$\mathscr{L}\left[\int_{0-}^{t} f(\tau)\,d\tau\right]$	$= \frac{F(s)}{s}$	Integration theorem
11.	$f(\infty)$	$= \lim_{s\to 0} sF(s)$	Final value theorem[1]
12.	$f(0+)$	$= \lim_{s\to\infty} sF(s)$	Initial value theorem[2]

[1] For this theorem to yield correct finite results, all roots of the denominator of $F(s)$ must have negative real parts and no more than one can be at the origin.
[2] For this theorem to be valid, $f(t)$ must be continuous or have a step discontinuity at $t = 0$ (i.e., no impulses or their derivatives at $t = 0$).

Inverse Laplace Transform

$$* \, Inverse\ Laplace\ Transform\ (ILT)$$

$$\mathcal{L}^{-1}[F(s)] = f(t) = \frac{1}{2\pi j}\int_{\sigma - j\infty}^{\sigma + j\infty} F(s)e^{st}ds \quad (t \geq 0)$$

$$* \, A\ method\ for\ finding\ ILT: Partial\ Fraction\ Expansion\ (PFE)$$

$$F(s) = \frac{N(s)}{D(s)}, \text{ the order of } [N(s)] < \text{the order of } [D(s)]$$

Case 1. Roots of the Denominator of F(s) are Real and Distinct

$$F(s)=\frac{N(s)}{D(s)}=\frac{N(s)}{(s+p_1)(s+p_2)\cdots(s+p_n)}$$

$$=\frac{K_1}{(s+p_1)}+\frac{K_2}{(s+p_2)}+\cdots+\frac{K_m}{(s+p_m)}+\cdots+\frac{K_n}{(s+p_n)} \qquad (2.11)$$

$$(s+p_m)F(s)=\frac{(s+p_m)N(s)}{(s+p_1)(s+p_2)\cdots(s+p_m)\cdots(s+p_n)}$$

$$=(s+p_m)\frac{K_1}{(s+p_1)}+(s+p_m)\frac{K_2}{(s+p_2)}+\cdots K_m+\cdots+(s+p_m)\frac{K_2}{(s+p_n)} \qquad (2.12)$$

$$K_m=\lim_{s\to -p_m}\left[(s+p_m)\frac{N(s)}{D(s)}\right]=$$

$$(s+p_m)\frac{N(s)}{(s+p_1)(s+p_2)\cdots(s+p_m)\cdots(s+p_n)}\Bigg|_{s\to -p_m} \qquad (2.13)$$

Ex 2.3 Laplace transform solution of a differential equation

Solve for y(t) in the following differential equation if all initial conditions are zero. Input u(t) is unit step.

$$\frac{d^2y}{dt^2}+12\frac{dy}{dt}+32y=32u(t)$$

$Sol)$

$$s^2Y(s)+12sY(s)+32Y(s)=\frac{32}{s}$$

$$Y(s)=\frac{32}{s(s^2+12s+32)}=\frac{32}{s(s+4)(s+8)}=\frac{K_1}{s}+\frac{K_2}{(s+4)}+\frac{K_3}{(s+8)}$$

$$*K_m=\frac{N(s)}{D(s)}(s+p_m)\Big|_{s=-p_m}$$

Distinct Real Roots

$$K_1 = \frac{32}{s(s+4)(s+8)} s \Big|_{s=0} = 1$$

$$K_2 = \frac{32}{s(s+4)(s+8)} (s+4) \Big|_{s=-4} = -2$$

$$K_3 = \frac{32}{s(s+4)(s+8)} (s+8) \Big|_{s=-8} = 1$$

$$\therefore \quad Y(s) = \frac{1}{s} - \frac{2}{(s+4)} + \frac{1}{(s+8)}$$

$$y(t) = \mathcal{L}^{-1}\{Y(s)\} = (1 - 2e^{-4t} + e^{-8t})u(t)$$

Case 2. Roots of the Denominator of F(s) are Real and Repeated

$$F(s)=\frac{2}{(s+1)(s+2)^2}=\frac{K_1}{s+1}+\frac{K_2}{(s+2)^2}+\frac{K_3}{(s+2)}$$

$$\left.\frac{2}{(s+1)(s+2)^2}(s+1)\right|_{s=-1}=K_1+\left.(s+1)\frac{K_2}{(s+2)^2}+(s+1)\frac{K_3}{(s+2)}\right|_{s=-1} \qquad \therefore K_1=2$$

$$\left.\frac{2}{(s+1)(s+2)^2}(s+2)^2\right|_{s=-2}=\left.(s+2)^2\frac{K_1}{s+1}+K_2+(s+2)K_3\right|_{s=-2} \qquad \therefore K_2=-2$$

윗식을 미분하면

$$\frac{a'b-ab'}{b^2}$$

$$\left.\frac{-2}{(s+1)^2}\right|_{s=-2}=\left.\frac{s(s+2)}{(s+1)^2}K_1+K_3\right|_{s=-2} \qquad \therefore K_3=-2$$

$$\therefore\ f(t)=\mathcal{L}^{-1}\{F(s)\}=2e^{-t}-2te^{-2t}-2e^{-2t}$$

$$Ex) \quad F(s) = \frac{s^2+2s+3}{(s+1)^3}$$

$$= \frac{K_1}{s+1} + \frac{K_2}{(s+1)^2} + \frac{K_3}{(s+1)^3}$$

$$*\mathcal{L}^{-1}\left\{\frac{1}{(s+p_1)^n}\right\} = \frac{t^{n-1}}{(n-1)!}e^{-p_1 t}$$

$$K_3 = s^2+2s+3\Big|_{s=-1} = 2, \qquad K_2 = \left\{\frac{d}{ds}\left[\frac{B(s)}{A(s)}(s+1)^3\right]\right\}\Bigg|_{s=-1} = \{2s+2\}\Big|_{s=-1} = 0$$

$$K_1 = \frac{1}{2!}\left\{\frac{d^2}{ds^2}\left[\frac{B(s)}{A(s)}(s+1)^3\right]\right\}\Bigg|_{s=-1} = \frac{1}{2}2 = 1$$

$$f(t) = \mathcal{L}^{-1}\left\{\frac{1}{s+1} + \frac{2}{(s+1)^3}\right\} = e^{-t} + 2\cdot\frac{t^2}{2}e^{-t} = (t^2+1)e^{-t} \quad , \quad t \ge 0$$

$$F_1(s) = (s+p_1)^r F(s) = \frac{(s+p_1)^r N(s)}{(s+p_1)^r (s+p_2)\cdots(s+p_n)}$$

$$= (s+p_1)^r \left[\frac{K_1}{(s+p_1)^r} + \frac{K_2}{(s+p_1)^{r-1}} + \frac{K_3}{(s+p_1)^{r-2}} \cdots + \frac{K_r}{(s+p_1)} + \frac{K_{r+1}}{(s+p_2)} + \cdots + \frac{K_{r+m}}{(s+p_m)} \right]$$

$$= K_1 + (s+p_1)K_2 + (s+p_1)^2 K_3 \cdots + (s+p_1)^{r-1} K_r + (s+p_1)^r \frac{K_{r+1}}{(s+p_2)} + \cdots + (s+p_1)^r \frac{K_{r+m}}{(s+p_m)} \qquad (2.28)$$

$$K_1 = \left[(s+p_1)^r F(s) \right]_{s=-p_1}$$

$$K_2 = \frac{d}{ds} \left[(s+p_1)^r F(s) \right]_{s=-p_1}$$

$$K_3 = \frac{1}{2!} \frac{d^2}{ds^2} \left[(s+p_1)^r F(s) \right]_{s=-p_1}$$

$$\vdots \qquad \vdots \qquad \vdots$$

$$K_i = \frac{1}{(i-1)!} \frac{d^{i-1}}{ds^{i-1}} \left[(s+p_1)^r F(s) \right]_{s=-p_1} \qquad (2.29)$$

Case 3. Roots of the Denominator of F(s) are Complex and Repeated

$$Ex.\ F(s)=\frac{3}{s(s^2+2s+5)}=\frac{K_1}{s}+\frac{K_2 s+K_3}{s^2+2s+5}$$

$$K_1=sF(s)\big|_{s=0}=\frac{3}{5}$$

$$K_2 s+K_3\big|_{s=-1-j2,-1+j2}=\frac{3}{s(s^2+2s+5)}(s+1+j2)(s+1-j2)\Big|_{s=-1-j2,-1+j2}$$

$$\frac{3}{s}\Big|_{s=-1-j2}=\frac{3(-1+j2)}{5}=K_2 s+K_3\big|_{s=-1-j2}=K_2(-1-j2)+K_3=(-K_2+K_3)-j2K_2$$

$$-\frac{3}{5}=-K_2+K_3,\qquad \therefore\quad K_2=-\frac{3}{5},\quad -\frac{6}{5}=K_3$$

$$\therefore F(s)=\frac{3}{s(s^2+2s+5)}=\frac{3/5}{s}-\frac{3}{5}\frac{s+2}{s^2+2s+5}=\frac{3}{5}\frac{1}{s}-\frac{3}{5}\frac{(s+1)+(1/2)(2)}{(s+1)^2+2^2}$$

$$f(t)=\mathcal{L}^{-1}\left\{\frac{3/5}{s}-\frac{3}{5}\frac{s+2(1/2)}{s^2+2s+5}\right\}=\frac{3}{5}-\frac{3}{5}e^{-t}\left(\cos 2t+\frac{1}{2}\sin 2t\right)$$

Home Work #2-1 (Due date: One weeks from today)

1. What assumption is made concerning initial conditions when dealing with transfer functions?

2. The motor's transfer function relates armature displacement to armature voltage. How can the transfer function that relates load displacement and armature voltage be determined?

3. Solve Problem 2 (2) on page 96 (98) in the text book.

4. Solve Problems 8 (7) on page 96 (98) in the text book.

5. Solve Problem 11 (10) on page 96 (98) in the text book.